ALL DIMENSION AND MEASURE-MENTS SHALL BE CHECKED AND VERIFIED BY THE CONTRACTOR AT THE SITE

FRONT ELEVATION - EAST
1/4"=1'-0"

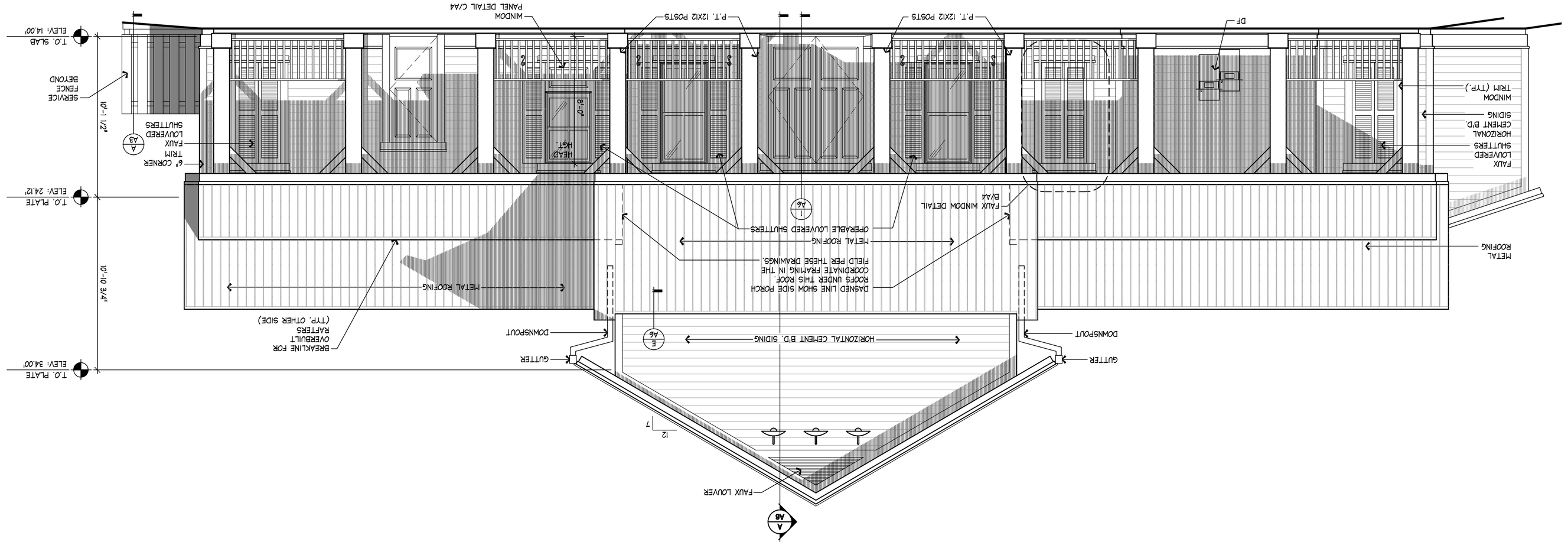

REAR ELEVATION - WEST
1/4"=1'-0"

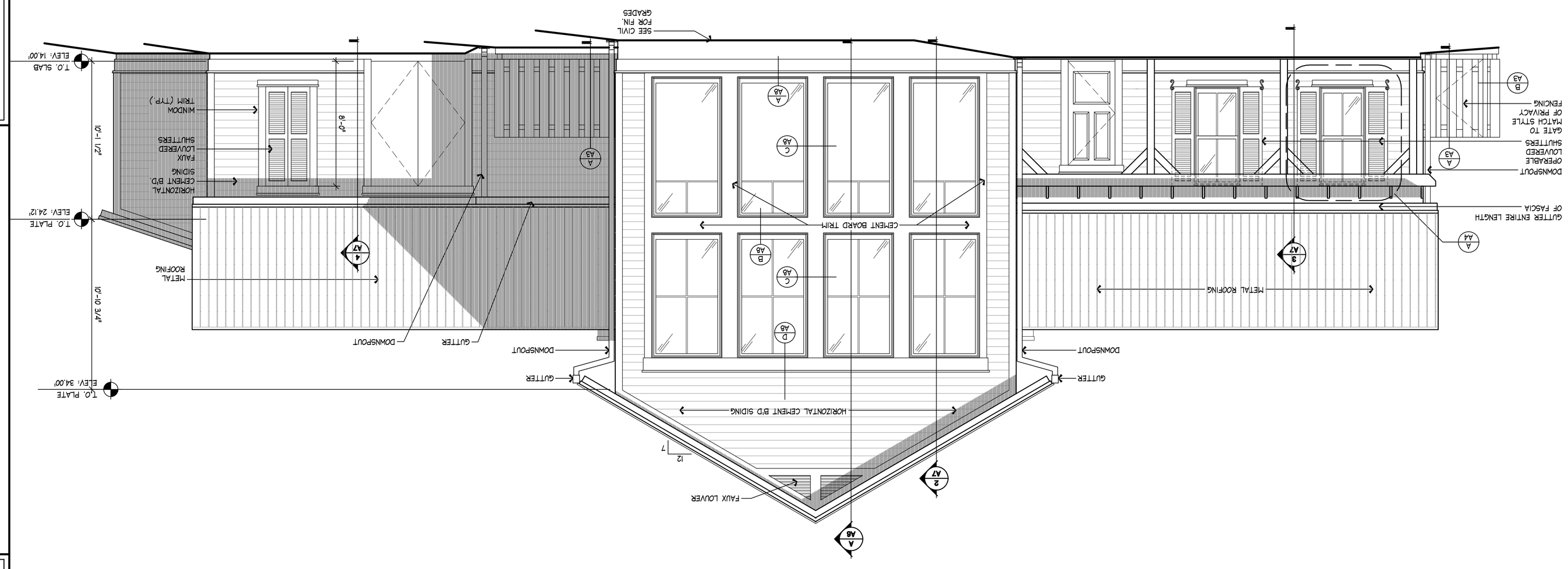

DETAIL A A3
3/4"=1'-0"

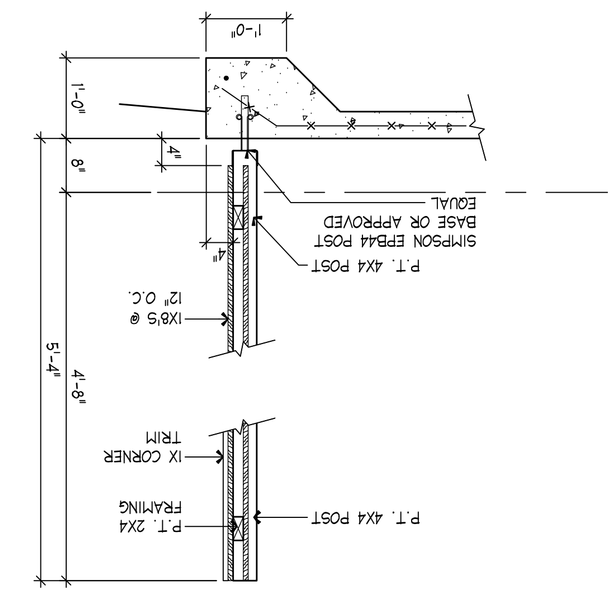

DETAIL B A3
3/4"=1'-0"

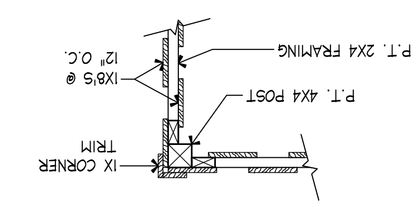

ARCHITECTURAL

3

FRONT AND REAR ELEVATIONS

NEW INTERPRETIVE CENTER & PAVILION FOR:

FORT FREMONT

ST. HELENA ISLAND
BEAUFORT CO. SC

DATE: 6-06-17 | SCALE: AS NOTED | DRAWN BY: DB | CHECK'D BY: MG | PROJECT NO: 1635

MICHAEL GRIFFITH
Architect
6045 STRAFFORD OAKS DRIVE
SEBRING, FL 33875
843-815-4282

REVISIONS

MARK DATE ITEM

COPYRIGHT

THIS DRAWING IS THE PROPERTY OF MICHAEL GRIFFITH, ARCHITECT, AND MAY NOT BE REPRODUCED, COPIED, IN WHOLE OR PART OR ALTERED WITHOUT WRITTEN PERMISSION FROM AUTHOR. IT IS NOT TO BE USED ON ANY OTHER PROJECT AND MUST BE RETURNED UPON REQUEST. OWNER AGREES TO PAY ALL DEFENSE COSTS AND HOLD HARMLESS THE ARCHITECT FROM DEFECTS FROM ALTERED DOCUMENTS